SQP-SX30006
Technical Brief

Lamp Specifications
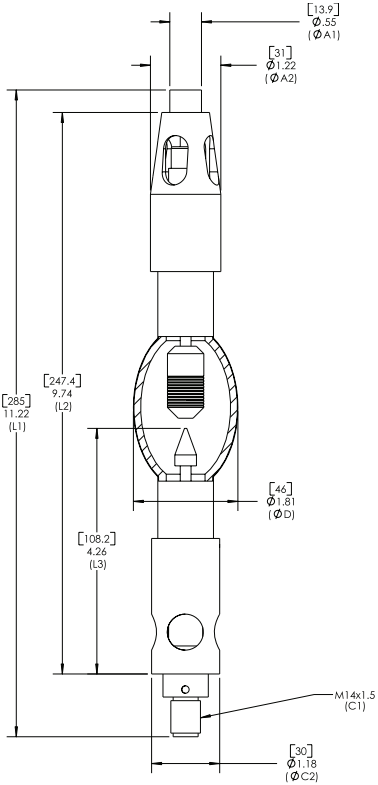
Quartz Type	Ozone Free
Wattage	3000
Voltage	30
Amperage	100
Current Range	90-105
Open Circuit Voltage	110
Luminous Flux	140000
Luminous Intensity	13500
Average Luminance	200000
Overall Length (L1)	11.22
Lamp Length (L2)	9.74
Tip to Shoulder Length (L3)	4.26
Bulb Diameter (D)	1.81
Cathode Pin (C1)	0.55
Cathode Base (C2)	1.22
Anode Pin (A1)	M14x1.5
Anode Base (A2)	1.18
Arc Length	0.25
Lead Wire	Y